3GPP SA Meeting #93-e
Elbonia, September 14 – 20, 2021

SP-211085

Background on: Extensions to the TSC Framework to support DetNet

Ericsson

© 3GPP 2020

Deterministic Networking

- Deterministic networking is a requirement for several application areas
  - Includes industrial communication and IIoT
- Historically deterministic networking has been handled by proprietary / fieldbus technologies
- Standardization efforts to address deterministic networking in global open standards
  - Ethernet: IEEE 802.1 TSN
  - IP: IETF DetNet
- IP benefit: flexibility and scalability
- Status of IETF DetNet has reached high level of maturity

- https://www.comsoc.org/publications/ctn/quick-and-dead-rise-deterministic-networks
- IETF RFC 8578, Deterministic Networking Use Cases

© 3GPP 2020

Possible use cases for DetNet

- Industrial machine-to-machine communication in discrete and process automation
- Building automation
- Smart grid communication
- Media
- Larger industrial installations
- …

In some use cases, IP based DetNet architecture can simplify deployment compared to Ethernet based TSN.

© 3GPP 2020

DetNet overview

- DetNet provides Layer 3 (IP/MPLS) networking aspects in support of applications requiring bounded low latency, low delay variation, and extremely low loss

- DetNet covers
  - characterization of flows
  - data plane, including encapsulation
  - required forwarding behavior

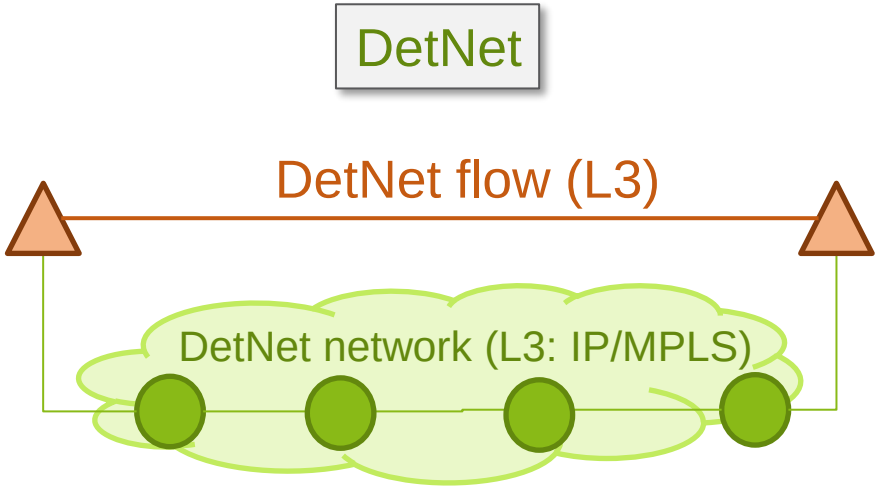

© 3GPP 2020

DetNet Standardization Status in IETF

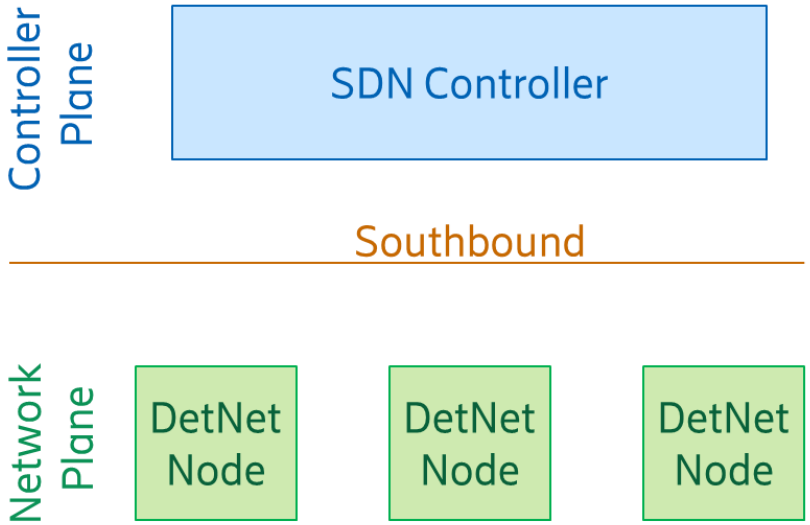

No new header field in data plane

Only specific use existing data plane

Ready standards

- RFC 8557 DetNet Problem Statement
- RFC 8578 DetNet Use Cases
- RFC 8655 DetNet Architecture
- draft-ietf-detnet-security (with RFC Editor)

- RFC 9016 DetNet Flow Information Model
- draft-ietf-detnet-yang (technically complete, reviews)

- RFC 8938 DetNet Data Plane Framework
- RFC 8939 DetNet Data Plane: IP
- RFC 8964 DetNet Data Plane: MPLS
- RFC 9025 DetNet Data Plane: MPLS over UDP/IP
- draft-ietf-detnet-ip-over-mpls
- draft-ietf-detnet-ip-over-tsn
- draft-ietf-detnet-mpls-over-tsn
- draft-ietf-detnet-tsn-vpn-over-mpls

(with RFC Editor)

- draft-ietf-detnet-bounded-latency (complete, reviews)

© 3GPP 2020

Re-use TSC framework for DetNet integration

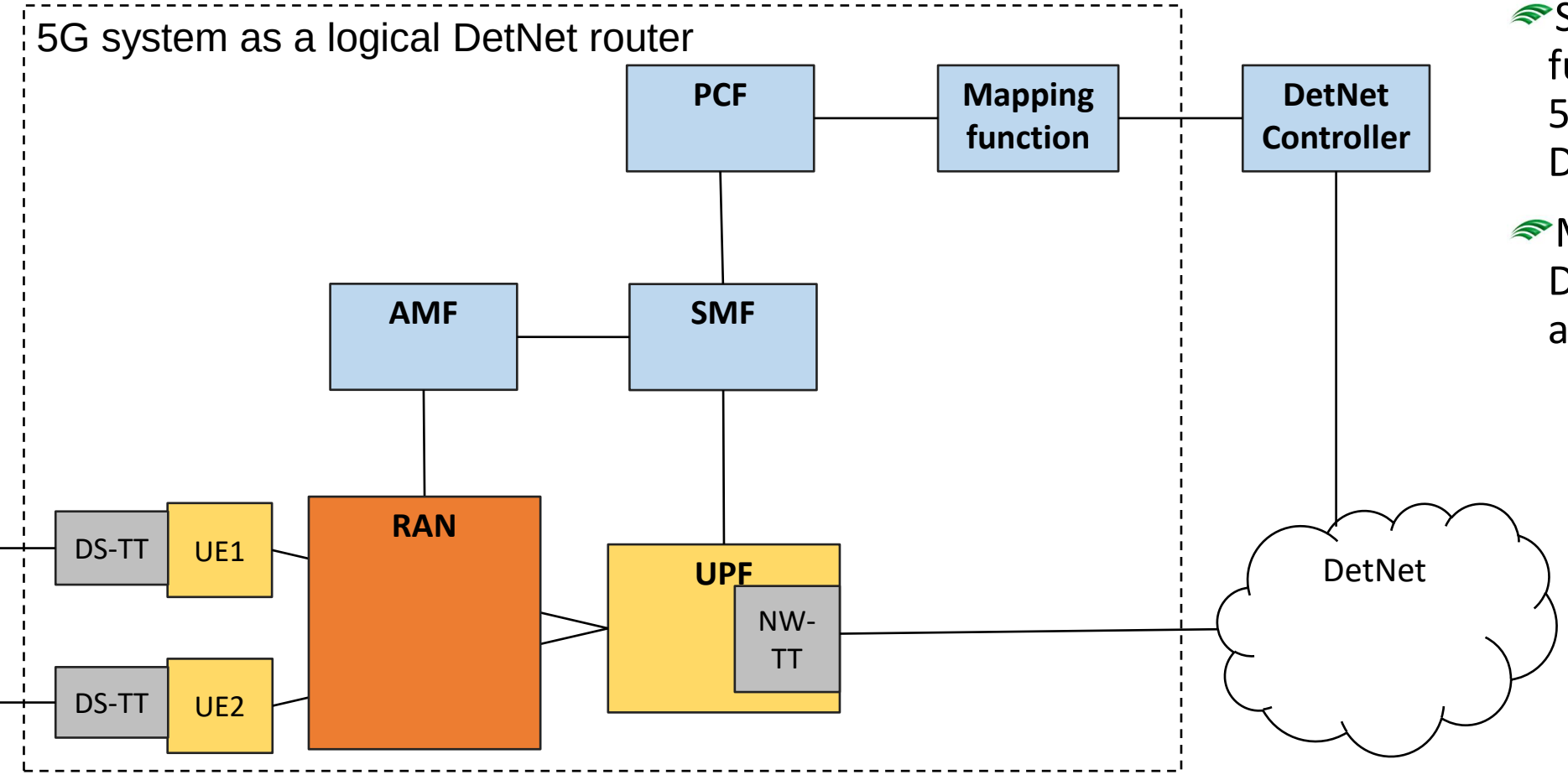

- Study which DetNet functionalities are relevant in 5GS deployments for basic DetNet integration.
- Mapping function between DetNet YANG configuration and 3GPP signalling.

© 3GPP 2020

Simplifying assumptions

- Only for IP DetNet; MPLS is out of scope.
- Re-use mechanisms for QoS.
- Re-use existing 3GPP routing mechanism; no new routing function is defined.
- No new 3GPP multicast functionality to be added.
- No new functionality for time synchronization is needed.

© 3GPP 2020

DetNet conclusion

- DetNet has reached maturity in the IETF standardization.
- It is one deterministic transport solution based on IP and it is relevant for IIoT.
- DetNet is a standalone feature that can be introduced in 3GPP without too much effort (i.e. it is a ”low hanging fruit”, timely completion of such features allow potential early start in, e.g. CT WGs) and does not have dependency to other proposed features.
- Ericsson proposes to introduce DetNet support reusing TSC architecture and concepts, as applicable, for 5GS, and by defining a mapping function for DetNet.

© 3GPP 2020